Wiring diagram for windlass supplied from bow battery

Blue Sea circuit breaker & switch
Code 7085 70A
Bezel 7918

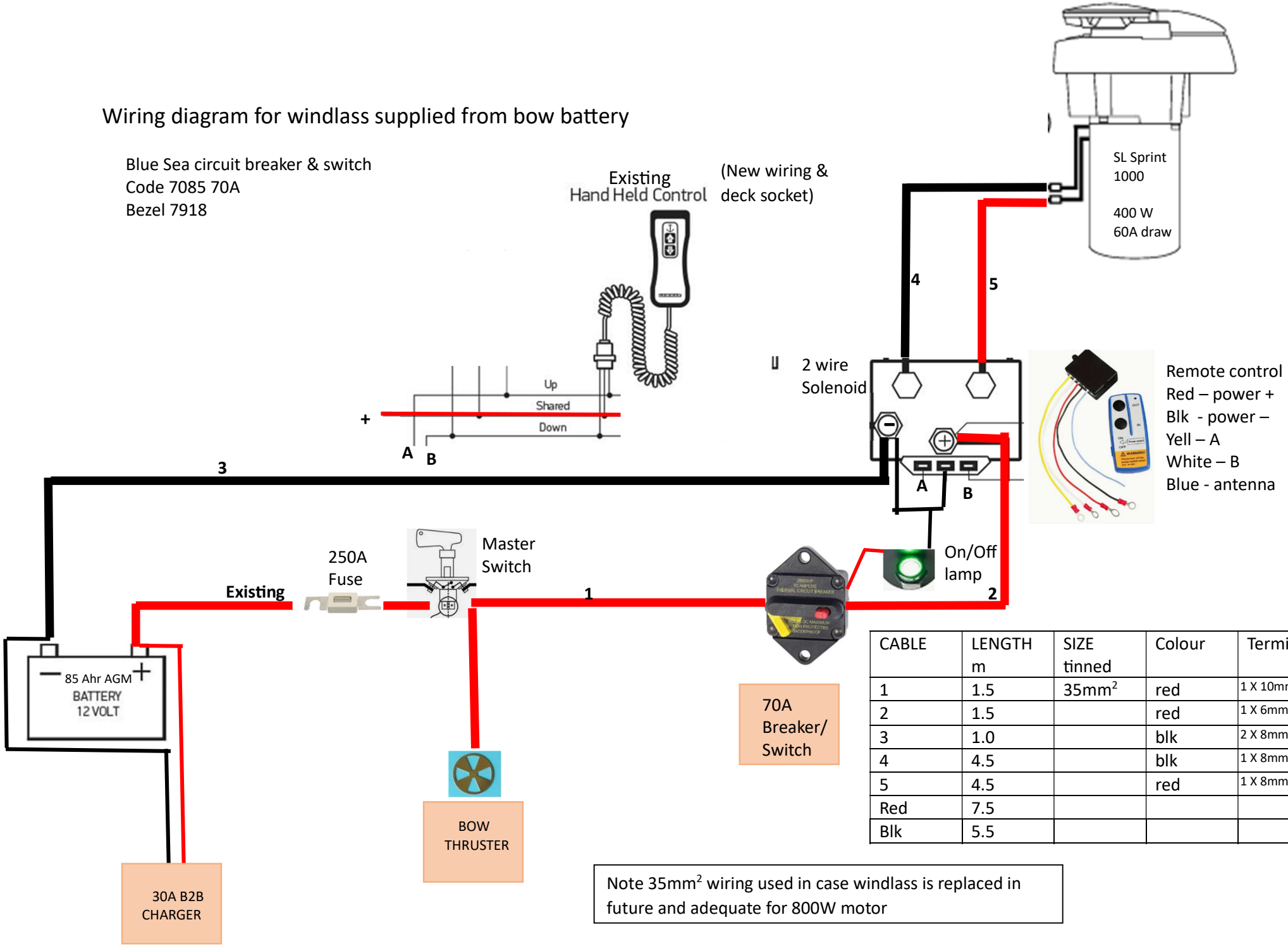

CABLE	LENGTH m	SIZE tinned	Colour	Terminations
1	1.5	35mm^2	red	1 X 10mm 1 X 6mm
2	1.5		red	1 X 6mm 1 X 8mm
3	1.0		blk	2 X 8mm
4	4.5		blk	1 X 8mm 1 X 6mm
5	4.5		red	1 X 8mm 1 X 6mm
Red	7.5			
Blk	5.5			

Note 35mm^2 wiring used in case windlass is replaced in future and adequate for 800W motor